BAINARD Nathan / 白望舒

https://github.com/Kanos89

Summary

1.Robotics and Systems Integration 2

1.1. Intelligent Robotic Measurement (HUST Internship 2025) 2

1.2. Current Project: Robotic Arm with gripper 4

2.Electronics of Communication Systems (ESC) 5

2.1. System Project: antenna for wireless UART communication 5

2.2. Circuit Project: alimentation tree for electronically adjustable antenna 7

3.Embedded Systems and Prototyping 10

3.1. PCB skills 10

3.2. CAD 3D modeling 13

4.International Experience 18

4.1. HUST Summer school Chinese Language and AI Robot 18

5.Certificates 19

5.1. HUST internship certificate 19

5.2. HUST volunteering 20

5.3. HUST Summer school 21

5.4. TOEIC English test score 22

5.5. Chinese A1 level by BUSUU 23

1.Robotics and Systems Integration

1.1. Intelligent Robotic Measurement (HUST Internship 2025)

Beforehand, my complete report is available upon request and the project is available on my GitHub:

https://github.com/Kanos89/GUI_RoboticArmScanner_PCLViewer_internship_2025.git

Design and implement a custom supervisory software application. This application would act as a central command unit, capable of:

1. Establishing simultaneous communication with both a robotic arm controller and a 3D scanner via appropriate protocols (TCP/IP).

2. Sending movement commands to the robot to position the scanner at various predefined points around a target component.

3.Triggering the scanner to capture a 3D scan at each position.

4. Managing the acquired point cloud data file for processing and visualization.

I designed a main GUI as shown on the left with the architecture on fig.2

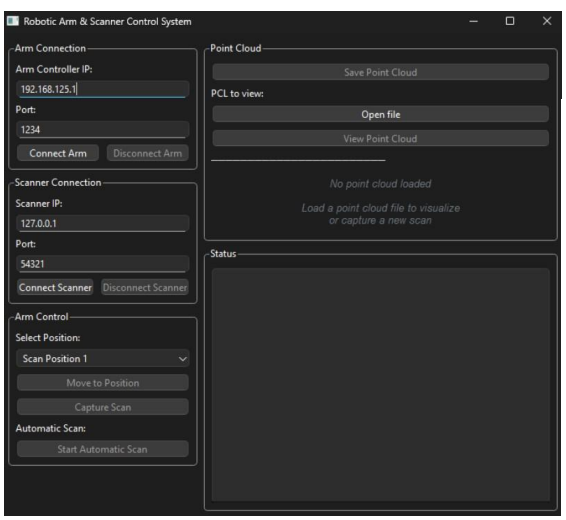

Fig.1 : preview of the main window

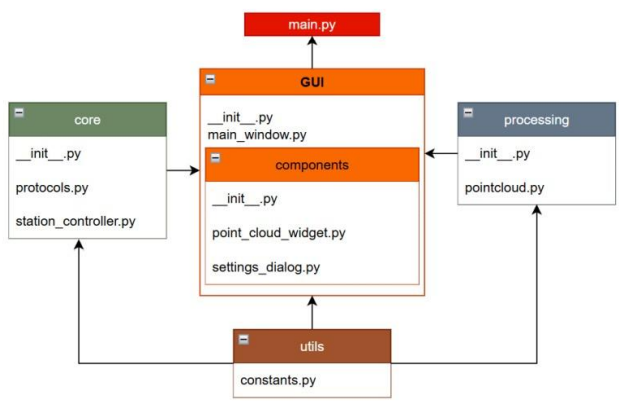

Fig.2 : architecture of the project

I have been also using Rapid language on ABB software to program the tcp/ip client and behavior of the robotic arm. On Fig.3 is a view of simulation and use of my software.

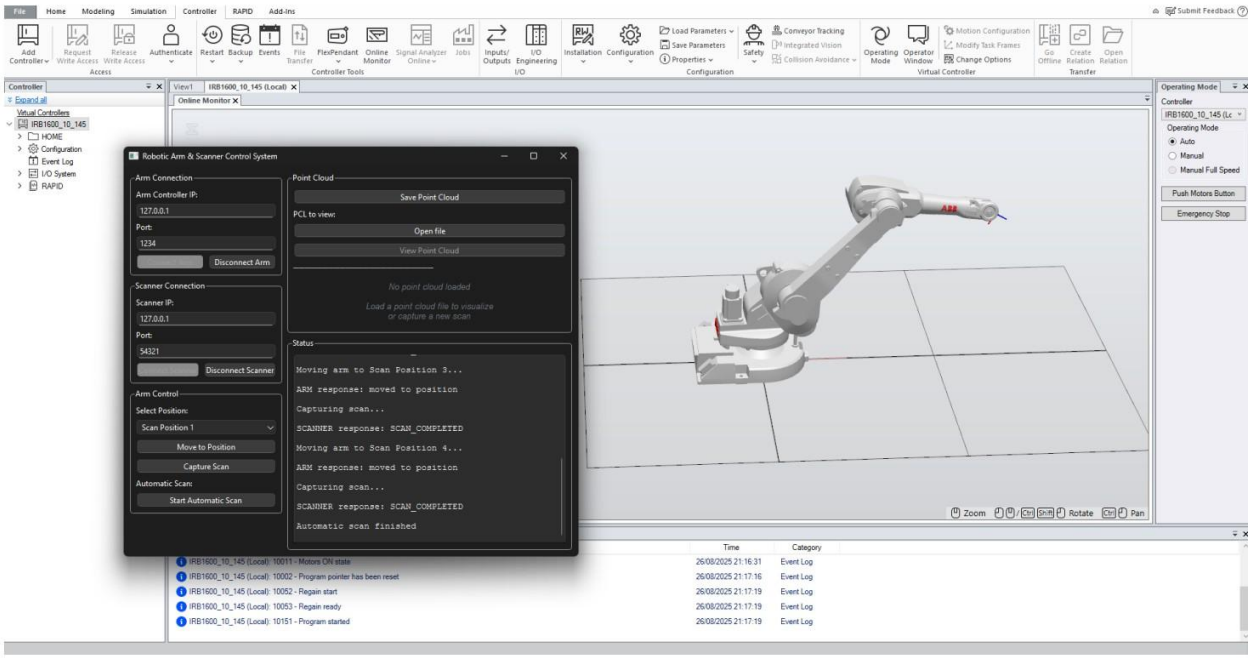

Fig.3 Simulation on Robot Studio

The final state of the project was to perform automatically a predefined path of scanning for a wrench, the video of the final laboratory session is available upon request.

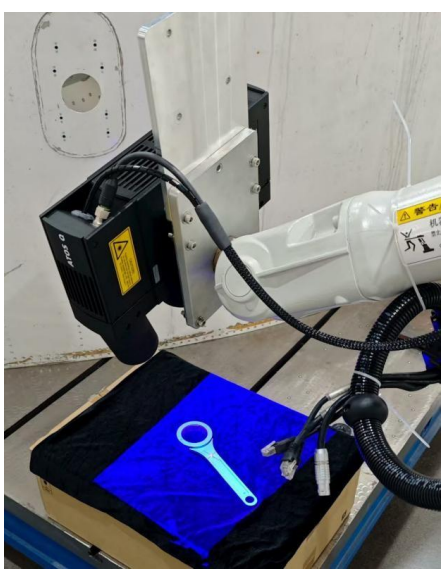

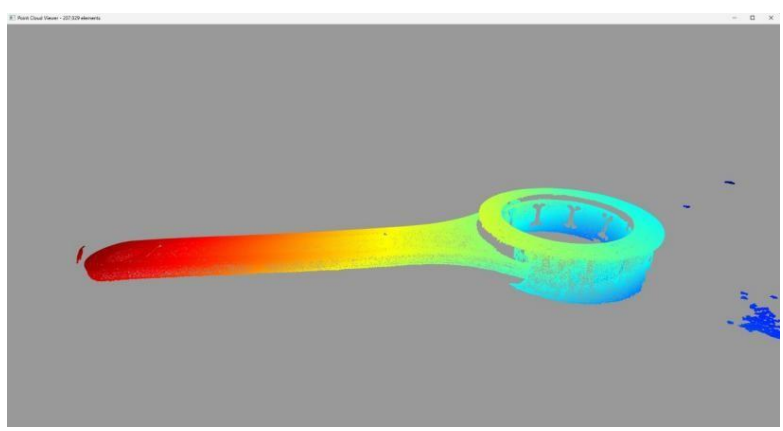

Fig.4 Setup of the scan

Fig.5 Point cloud view of scan

A certificate of completion of this internship available at the end of this document.

1.2. Current Project: Robotic Arm with gripper

I recently started a personal project to develop and acquire new skills in robotics in multiple fields such as microcontroller (STM32), ROS2, C++, inverse kinematics and SolidWorks.

The main goal is to design and build a robotic arm (inspired by industrial robotic arm) with a gripper controller with ROS2 support.

In the first place I made a C then a C++ algorithm to control a single servomotor.

The next step will be to understand and use the servomotor driver PCA9685 to control multiple servomotors with I2C protocol and external alimentation. A repository will be soon created on my GitHub to follow the progress of this project.

2.Electronics of Communication Systems (ESC)

Specialization in Electronics of Communication Systems (ESC) :

The Electronics of Communication Systems (ESC) specialty students to supplement their general training as electronic engineers with in-depth training in the field of analog. A very specific skill in microwaves, antennas and optical telecommunications is obtained at the end of this cycle.

This training and the methods acquired can be used in many fields: the automotive sector, communicating objects, radars (radio astronomy, countermeasures, etc.), contactless identification (RFID), wireless networks, etc.

2.1. System Project: antenna for wireless UART communication

I have been responsible to choose parts (antenna, high frequency switch, passive components) of the computer sided communication system to respect the specifications. I also mainly designed and rooted the PCB with the support of a classmate on KiCAD:

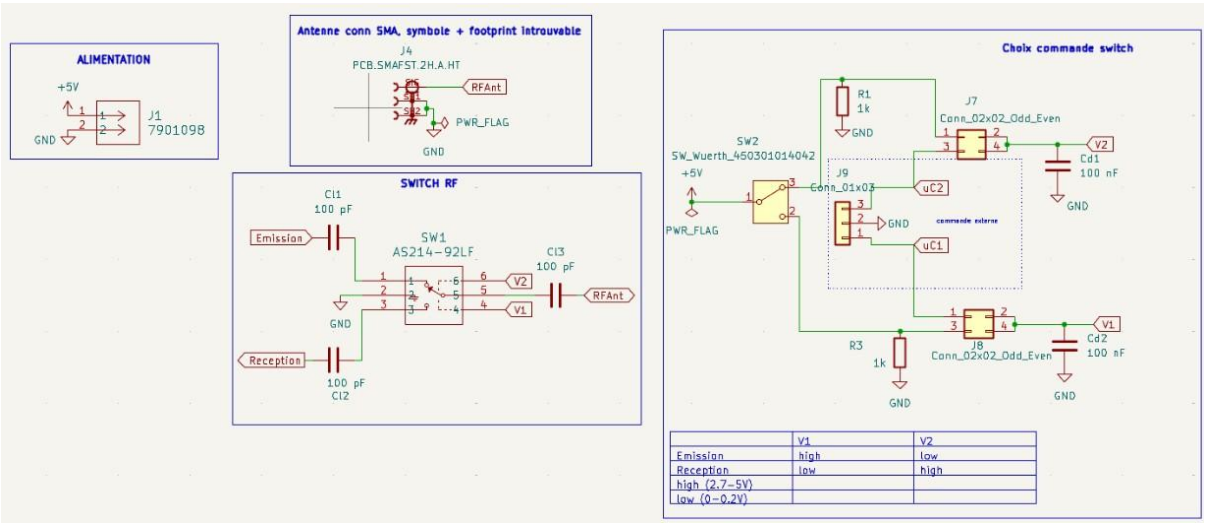

Fig.6 Schematic of the components I have chosen

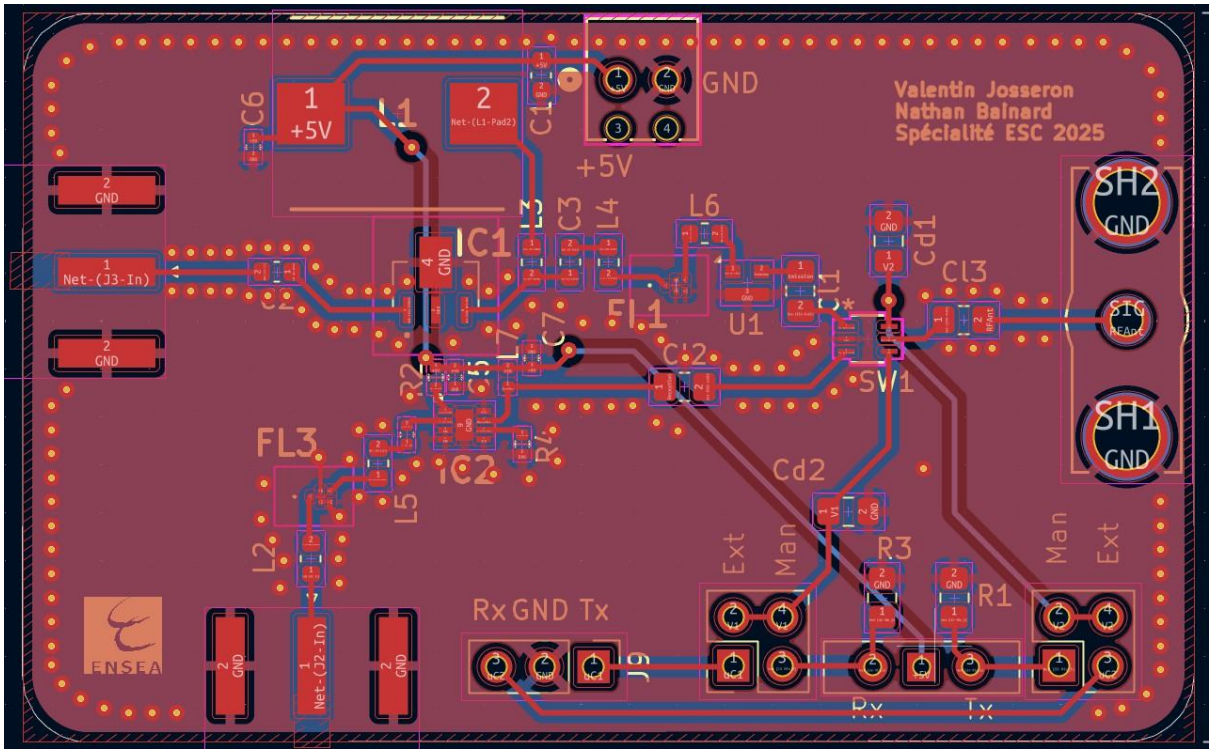

Fig.7 PCB Rooting including team components

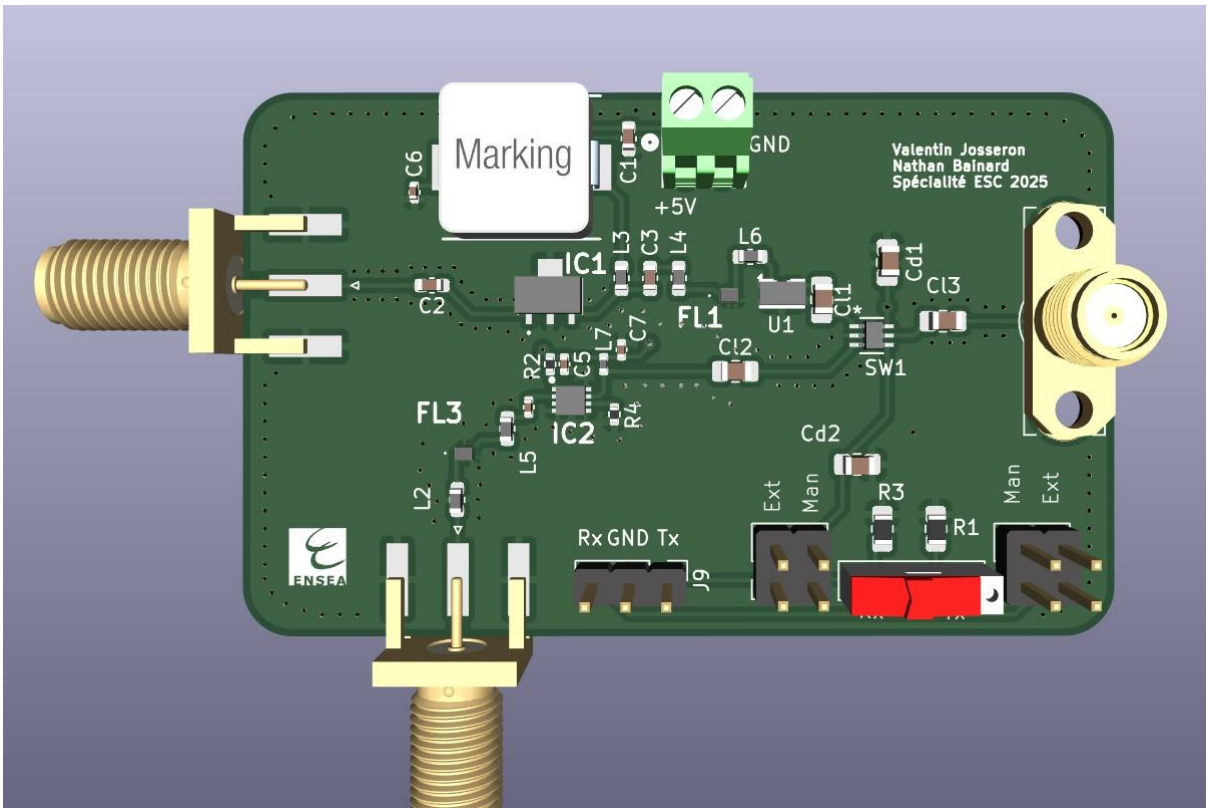

Fig.8 PCB 3D render on KiCad

2.2. Circuit Project: alimentation tree for electronically adjustable antenna

On this project I have been responsible with a classmate of designing an alimentation tree for an electronically adjustable antenna (antenna network with phase shifter to “control the orientation of the antenna”)

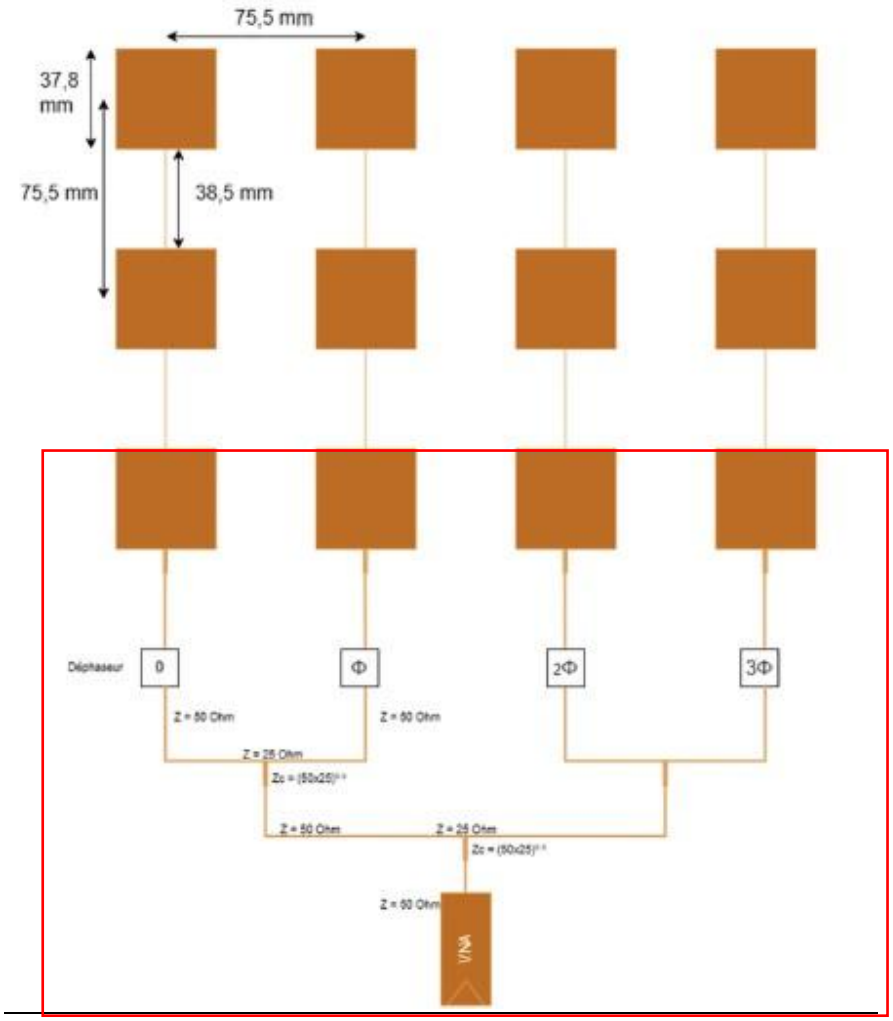

Fig.9 Concerned part of the project framed in red

The work implied to match the impedances of the lines and the phase shifter to reduce the losses and reflections in the circuit:

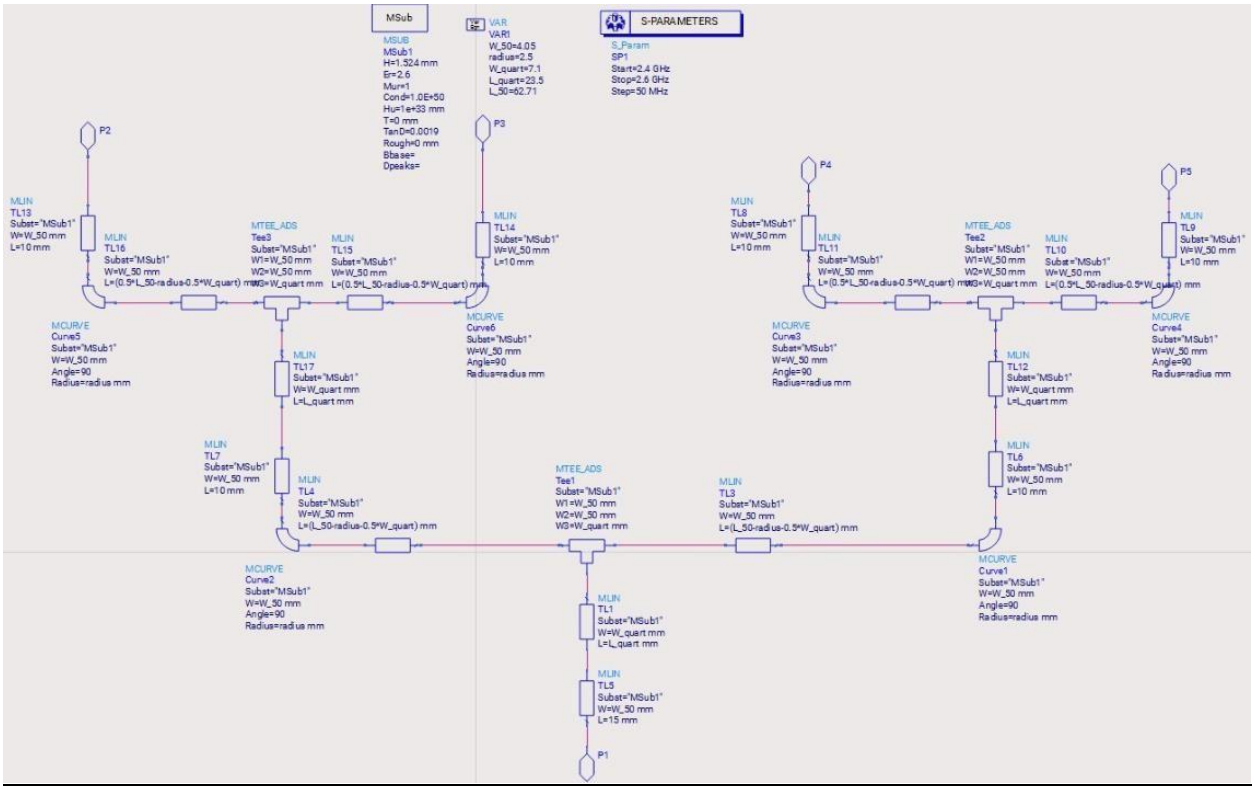

Fig.10 ADS schematic design

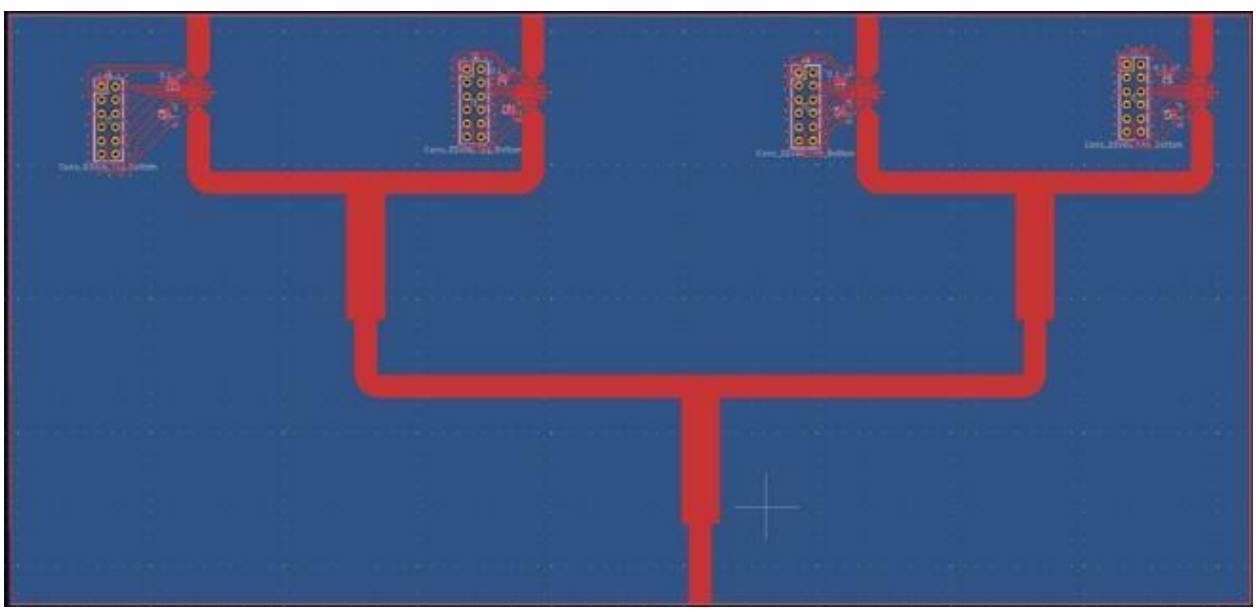

Fig.11 ADS layout with phase shifter footprint and pin connectors

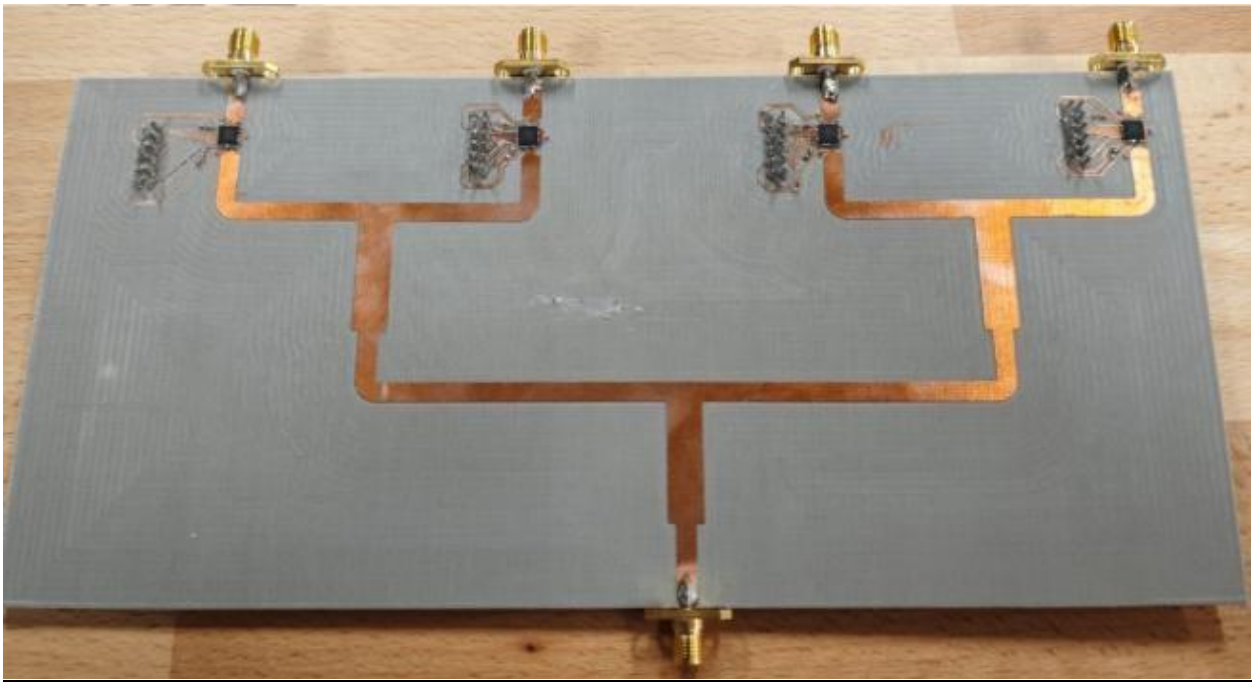

Fig.12 welded alimentation tree

The creation of the antenna at school was limited by the equipment on site for fast making so the rendering is far from perfect. The final welding process required a precise positioning of components and soldering skills:

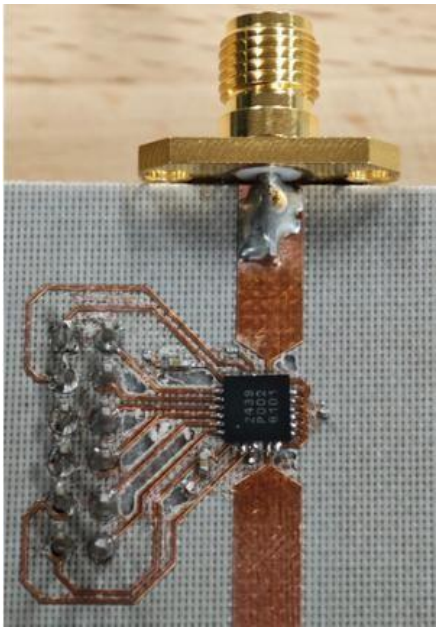

Fig.13 Closeup on the soldering

3.Embedded Systems and Prototyping

ENSEA MAKER option: ENSEA school students put into practice all their knowledge acquired between 3D modeling, PCB design, LASER cutter, Li-ion battery manufacturing, programming, mechanical construction, conventional and reflow soldering, etc. It is the entire arsenal of a general engineer which is put to use to carry out these projects.

3.1. PCB skills

I have been able to acquire PCB skills (design, rooting and soldering) due to many projects I will introduce here:

Flight control for a drone project in ENSEA MAKER option

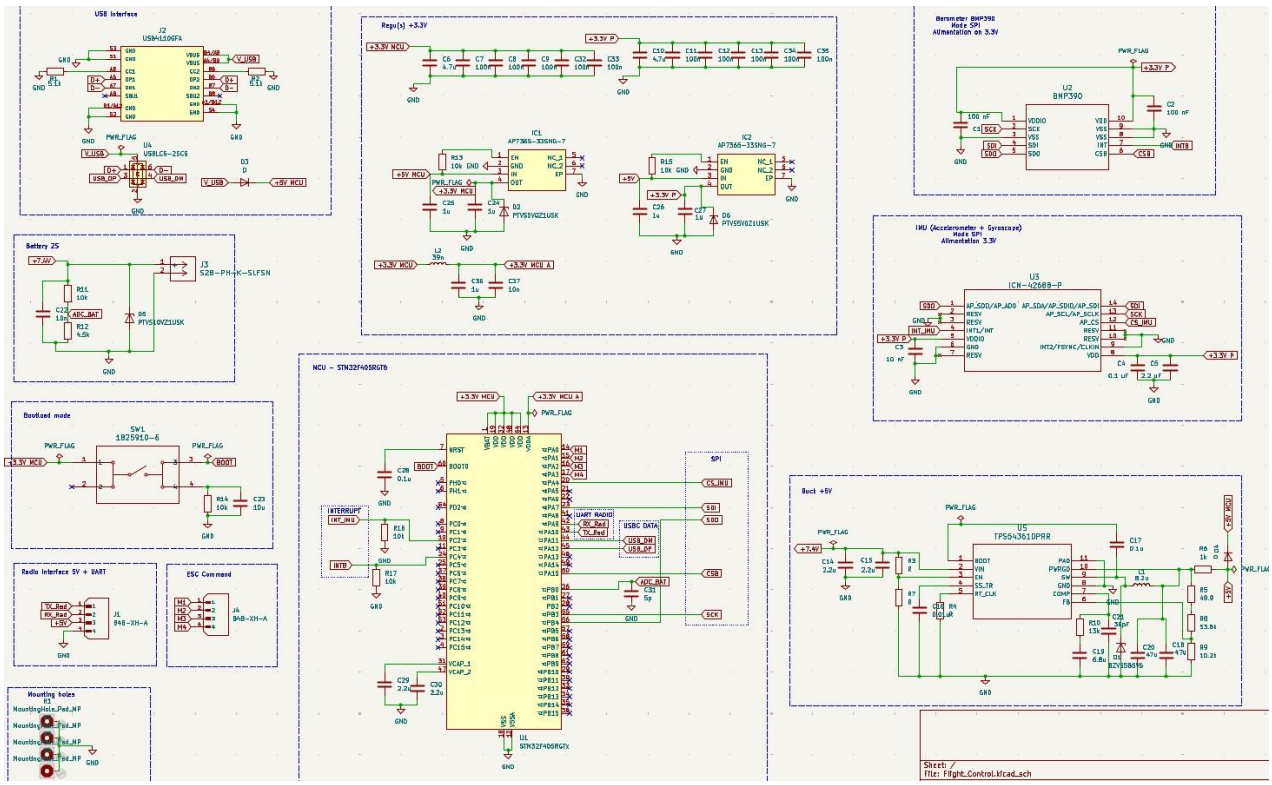

Fig.14 KiCad schematic of the flight control PCB

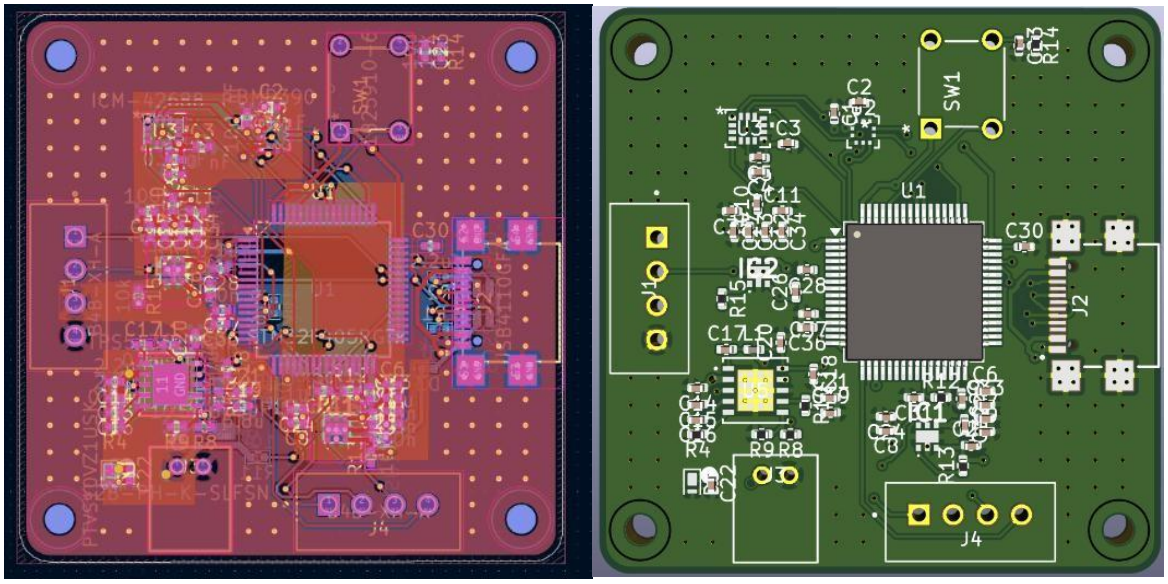

Fig.15 Four-layer PCB rooting with 3D view

2S1P Li-ion battery pack ENSEA MAKER option

This project got me started on spot welding machine

Fig.16 2S1p Li-ion battery pack finalized

stepper motor driver PCB

oven soldering (put in place precisely components) and hand soldering for connectors

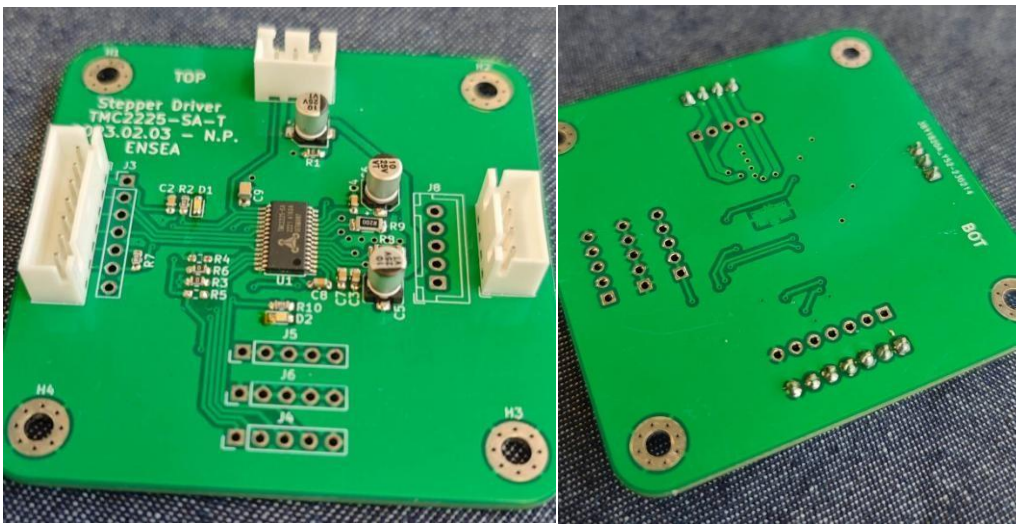

Fig.17 PCB oven soldering on top, hand soldering in bottom part

Damaged USB C connector replacement and joystick upgrade (analog to hall effect) on PlayStation 5 controller:

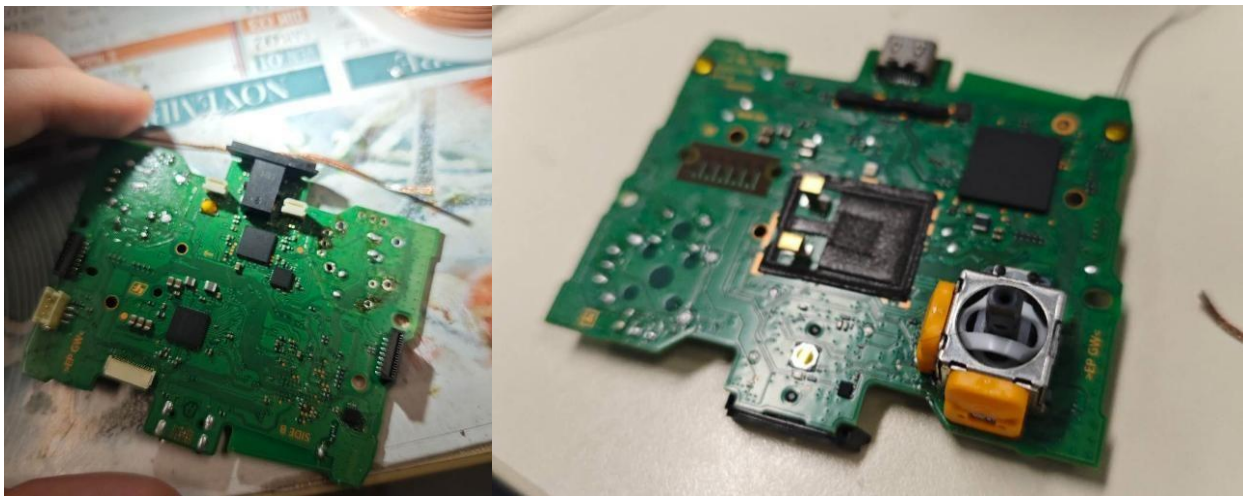

Fig.18 motherboard of PlayStation 5 controller during the component's replacement

Christmas tree PCB soldering

Fig.19 Christmas tree PCB

3.2. CAD 3D modeling

Keychain with Onshape (original design by partner)

Fig.20 Onshape design and 3D print

Club and school logo token for event (Onshape)

Fig.21 Onshape design

Fig.22 3D print with Bambu Lab printer

ENSEA MAKER option (Onshape)

Exercise 1:

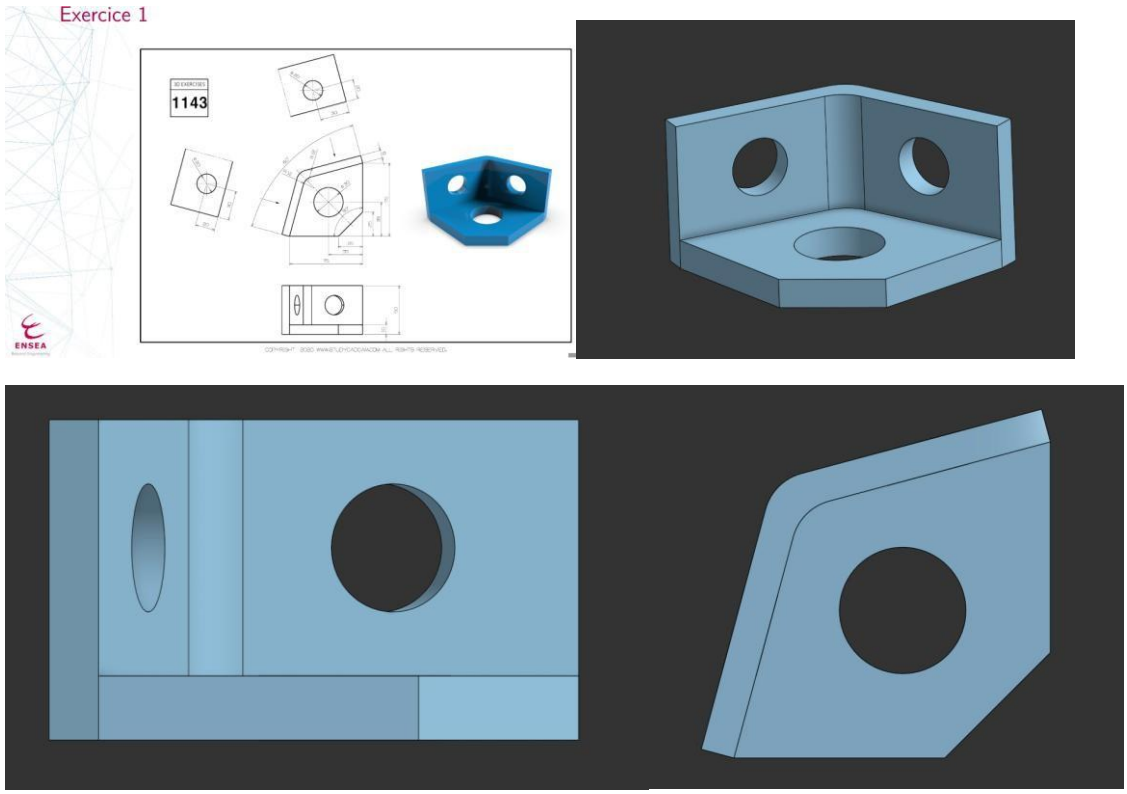

Fig.23 References and views of exercise 1 **Exercise 2:**

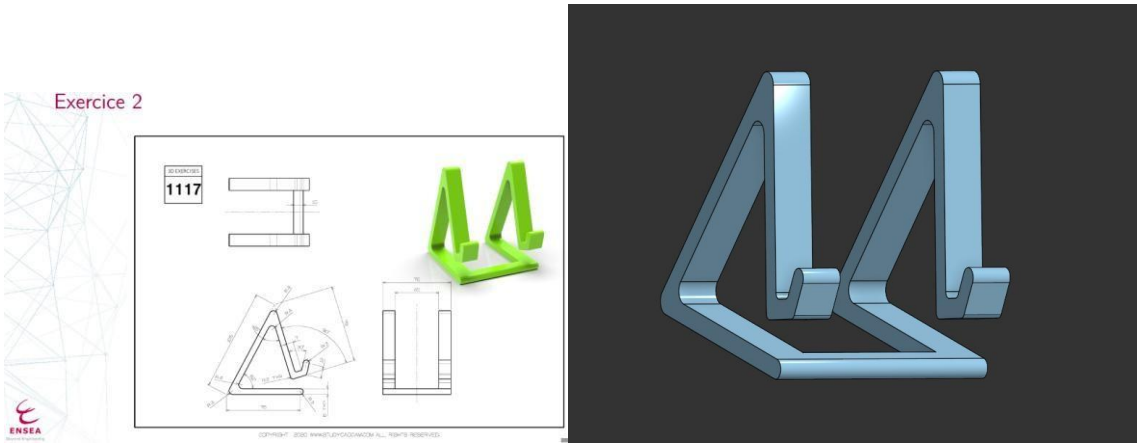

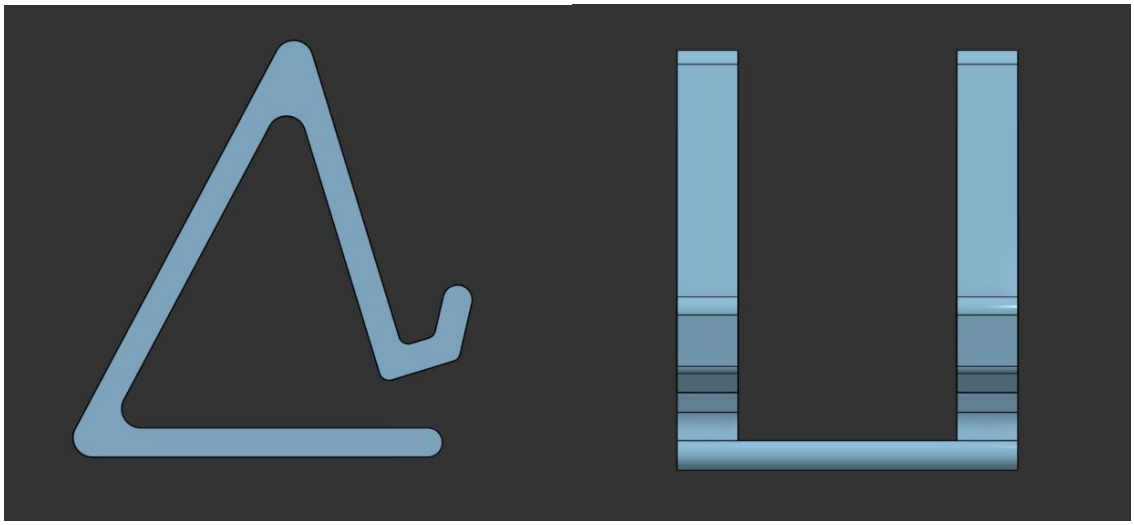

Fig.24 References and views of exercise 2

Exercise 3:

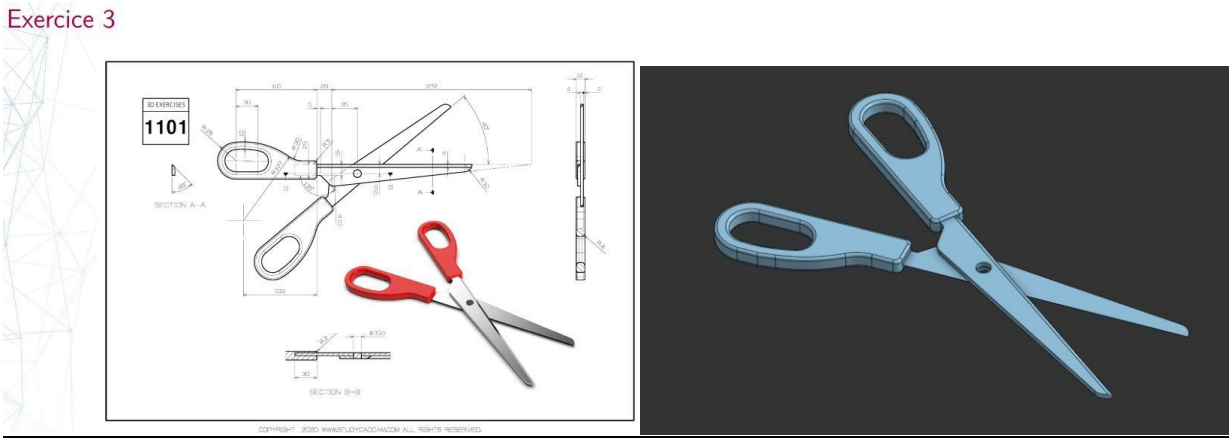

Fig.25 References and views of exercise 3

Useless Box: A box that close itself when the button is pressed

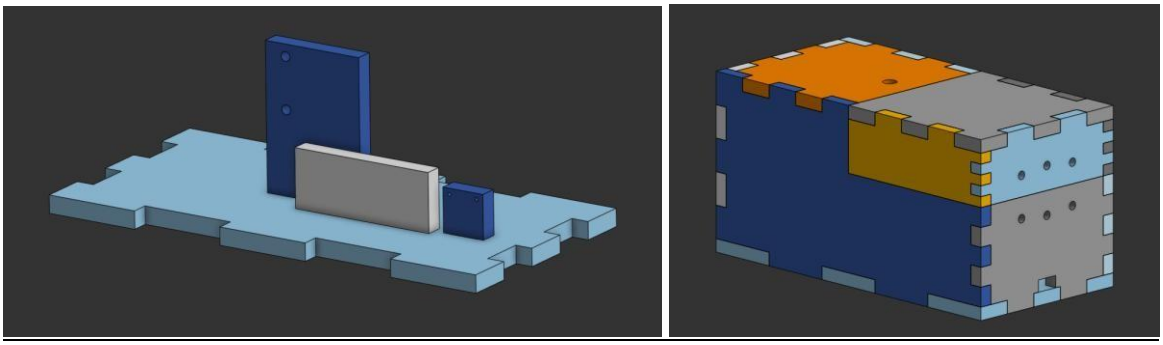

Fig.26 Onshape inside and complete assembly

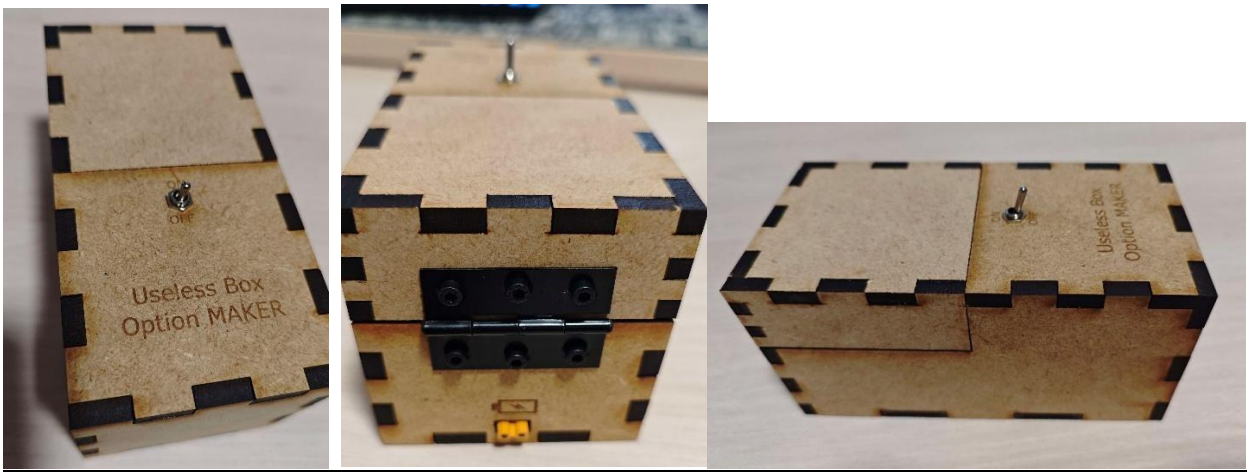

Fig.27 Finished box made with laser cutwood

Personal project: Nucleo STM32 protection case design (SolidWorks)

The goal was to make a case to protect my nucleo stm32 board, with a storage for USB cable, and panels to access the different connectors. Only remain a few screenshots of video of the making of my project. Unfortunately, I stopped the project as the designed file has been lost.

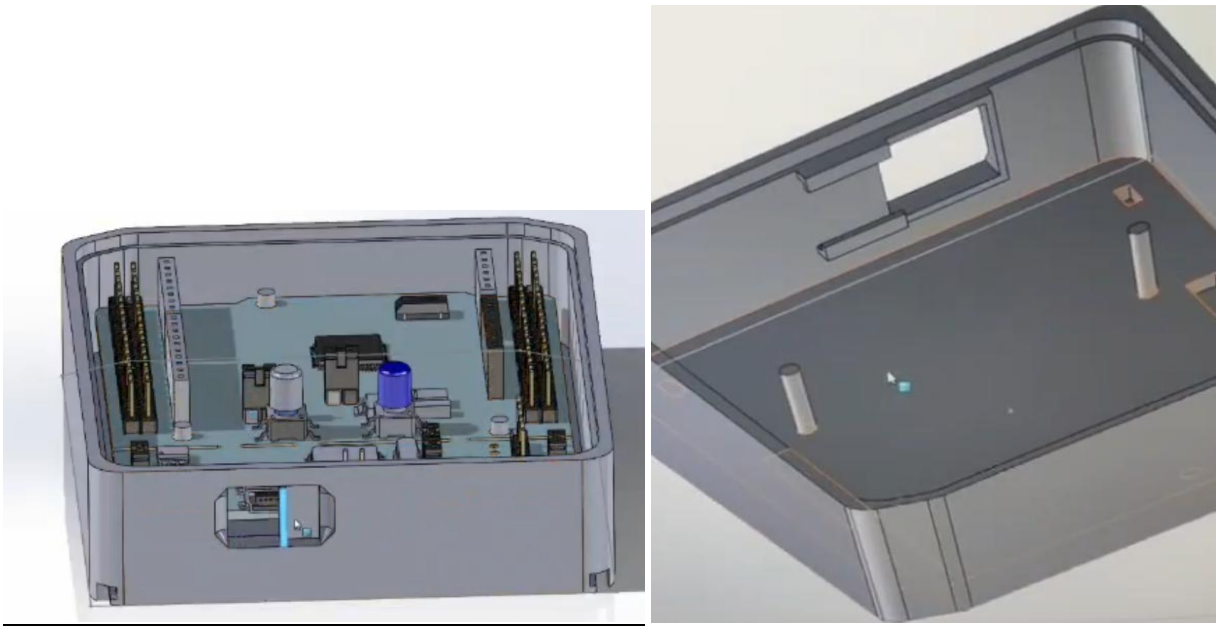

Fig.28 Main part of stm32 nucleo case

4.International Experience

4.1. HUST Summer school Chinese Language and AI Robot

In 2024 from June 17th to July 14th I participated in HUST Chinese language and AI Robot. During this month I had the opportunity to:

- Explore challenges and applications of robotics and AI through lectures about real projects (swarm robots, exoskeleton, robotic inspection …)
- Operated robotic arms and performed scanning process of industrial parts during practical work in laboratory
- Visited companies (岚图/Voyah for example) and gained insights into Chinese industrial innovation
- Engaged in cultural immersion activities (paper cutting, tea ceremony) and basic Chinese language workshops

5.Certificates

5.1. HUST internship certificate

HUST
Huazhong University of Science and Technology
華中科技大學
中华人民共和国 湖北 武汉

School of International Education
Tel:(+86)-27-8754 2457
Fax:(+86)-27-8779 2118
Website:http://iso.hust.edu.cn/

INTERNSHIP EVALUATION

THIS IS TO CERTIFY THAT BAINARD Nathan (INTERN NAME) WITH HUST ID 202580028 HAS ATTENDED THE "2025 INTERNSHIP PROGRAM IN SCIENTIFIC RESEARCH FOR STUDENTS FROM WORLD-RENOWNED UNIVERSITIES" OF HUAZHONG UNIVERSITY OF SCIENCE AND TECHNOLOGY FROM 04/14 TO 08/29.

SUPERVISOR NAME: Wei Du
RESEARCH PROJECT: Intelligent robotic measurement of complex industrial components
RESEARCH CONTENT: Robotic arm and scanner control and graphical user interface in 3D measurement for industrial inspection contexts
INTERNSHIP EVALUATION: Level 1

(NOTE: THERE ARE 4 LEVELS FOR EVALUATION GRADE. LEVEL 1: DISTINCTION, 80 ABOVE; LEVEL 2: MERIT, 70-79; LEVEL 3: PASS, 60-69; LEVEL 4: FAIL, 60 BELOW.)

PROGRAM MANAGER:
(SIGNATURE) YAN WEI

ACADEMIC SUPERVISOR:
(SIGNATURE) Wei Du

5.2. HUST volunteering

華中科技大学 机械科学与工程学院
School of Mechanical Science & Engineering of HUST

志愿者证书
VOLUNTEER CERTIFICATE

NATHAN JACKY ANDRE BAINARD：

2025年度-问学华中大-“人工智能机器人”国际暑期学校于2025年6月23日至7月18日在华中科技大学成功举办，感谢您作为志愿者为本次暑期学校圆满成功做出了重要贡献。

特发此证，以资鼓励。

2025 "Discover at HUST" AI Robot International Summer School was successfully held at HUST from 23 June 2025 to 18 July 2025. Thank you for your participation and contribution as a volunteer.

This certificate is hereby presented as a token of appreciation and encouragement.

华中科技大学机械科学与工程学院
School of Mechanical Science & Engineering of HUST

2025年7月18日
18 July 2025

5.3. HUST Summer school

華中科技大學 机械科学与工程学院
School of Mechanical Science & Engineering of HUST

Certificate of Completion

School of Mechanical Science & Engineering of HUST

awards this

Certificate of Completion

to

NATHAN JACKY ANDRE BAINARD

for successful completion of the

2024 Chinese Language + AI Robot Summer School

2024汉语+人工智能机器人国际生暑期班

Conducted from

17 June 2024 - 14 July 2024

School of Mechanical Science & Engineering of HUST

14 July 2024

No. 2024-07-0004

5.4. TOEIC English test score

ETS TOEIC

SCORE REPORT

Name: **Bainard Nathan**

Identification N°:

Date of Birth: **26 May 2003**

Test Date: **18 Jan 2024**

Valid Until: **18 Jan 2026**

Client/Institution: **ENSEA France, Metropolitan**

Listening	Reading	Total
5 – 495	5 – 495	10 – 990
475	435	910
CEFR Level: **B2**	CEFR Level: **B2**	CEFR Level: **B2***

CEFR: Common European Framework of Reference

Typical strengths for your **Listening** score

Your scaled score is between 400 and 495. Test takers who score around 400 typically have the following strengths:

- They can infer the central idea, purpose, and basic context of short spoken exchanges across a broad range of vocabulary, even when conversational responses are indirect or not easy to predict.
- They can infer the central idea, purpose, and basic context of extended spoken texts across a broad range of vocabulary. They can do this even when the information is not supported by repetition or paraphrase and when it is necessary to connect information across the text.
- They can understand details in short spoken exchanges, even when negative constructions are present, when the language is syntactically complex, or when difficult vocabulary is used.
- They can understand details in extended spoken texts, even when it is necessary to connect information across the text and when this information is not supported by repetition. They can understand details when the information is paraphrased or when negative constructions are present.

To see weaknesses typical of test takers who score around 400, see the Proficiency Description Table.

Typical strengths for your **Reading** score

Your scaled score is close to 450. Test takers who score around 450 typically have the following strengths:

- They can infer the central idea and purpose of a written text, and they can make inferences about details.
- They can read for meaning. They can understand factual information, even when it is paraphrased.
- They can connect information across an entire text, and they can make connections between two related texts.
- They can understand a broad range of vocabulary, unusual meanings of common words, and idiomatic usage.They can also make distinctions between the meanings of closely related words.
- They can understand rule-based grammatical structures. They can also understand difficult, complex, and uncommon grammatical constructions.

To see weaknesses typical of test takers who score around 450, see the Proficiency Description Table.

* The range of total scores associated with each CEFR level is estimated by adding the relevant cut scores from the Listening and Reading test section CEFR mappings. Whenever possible, ETS encourages score users to consider CEFR levels separately for Listening and Reading rather than using a single overall estimate based on the total score. This approach is more precise and considers a test taker's language profile, which may differ between listening and reading comprehension.

Note: TOEIC scores more than two years old cannot be reported or validated.

This score report is intended for use in the country of the Client/Institution.

ETS Global, 43-45 Rue Taitbout, 75009 Paris, France

www.etsglobal.org

Copyright © 2022 by ETS. All rights reserved. ETS, the ETS logo and TOEIC are registered trademarks of ETS in the United States and other countries.

5.5. Chinese A1 level by BUSUU

Busuu
a Chegg service

BUSUU CERTIFIED

Certificate of Level Completion

Presented to

BAINARD Nathan Jacky André

Who has successfully completed

Level A1 in Chinese on Busuu

Grade awarded

A+ (100%)

Awarded on October 19 2025 by Busuu

The learner has demonstrated that they can

- Understand and use familiar everyday expressions and very basic phrases
- Introduce himself / herself and others
- Ask questions about personal details
- Interact in a simple way

Sophie Huet
Director of Learning Design and Content